DressCode

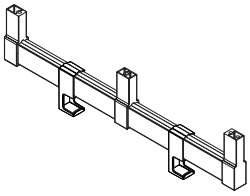

801.26.501	802.26.500
801.26.502	802.26.700
801.26.701	803.17.540
801.26.702	803.17.740

mm / in

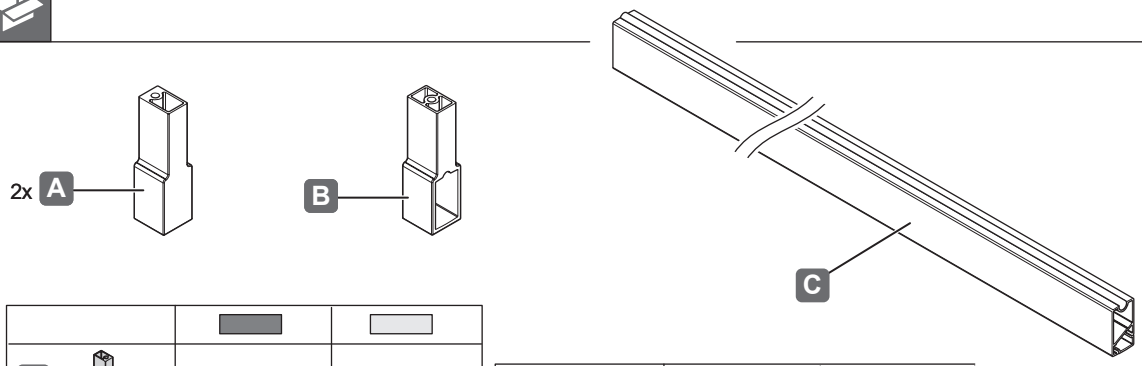

A	803.17.540	803.17.740
B	802.26.500	802.26.700

C	801.26.501 801.26.502	801.26.701 801.26.702

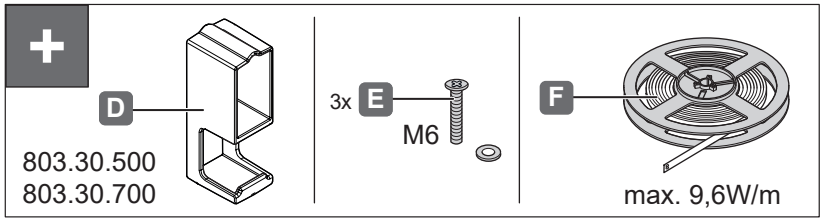

732.28.849

1

mm / in

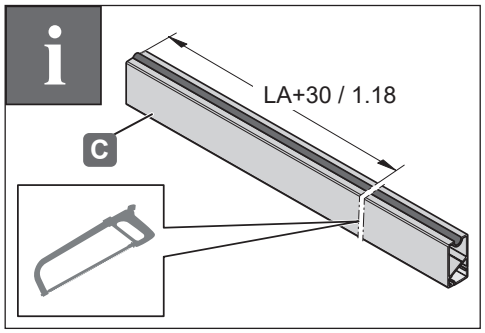

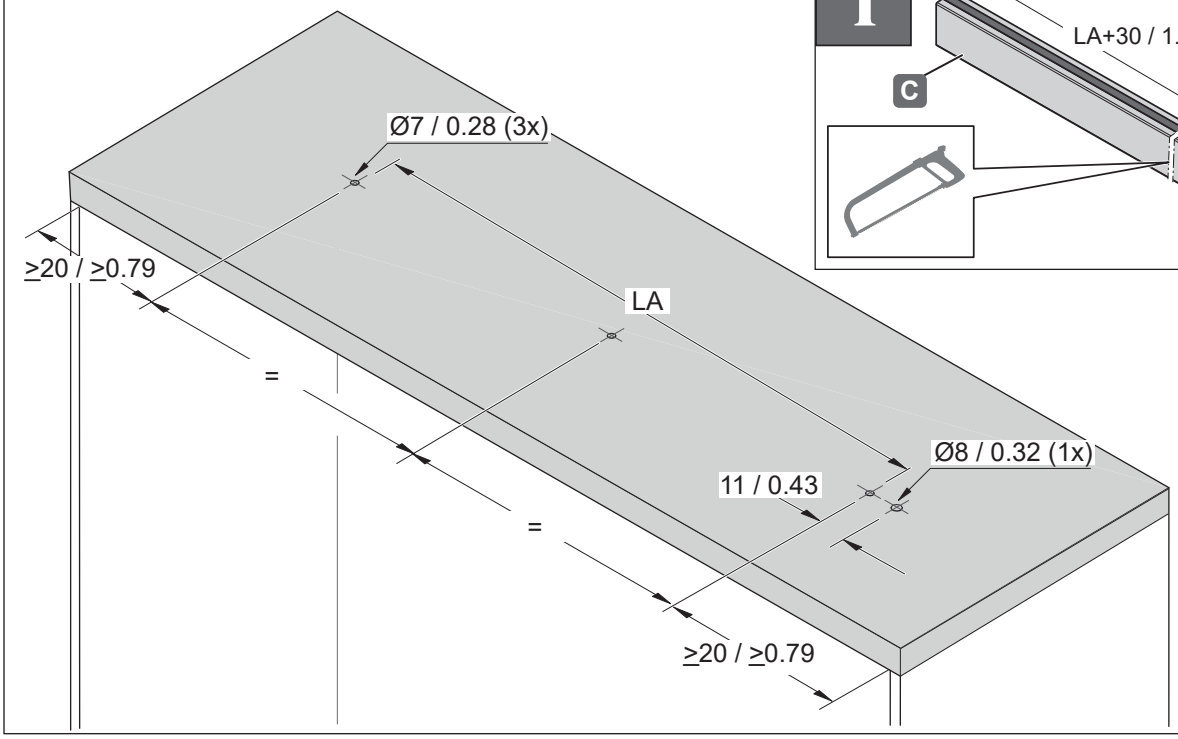

[WS138]

HDE 06.08.2024

2

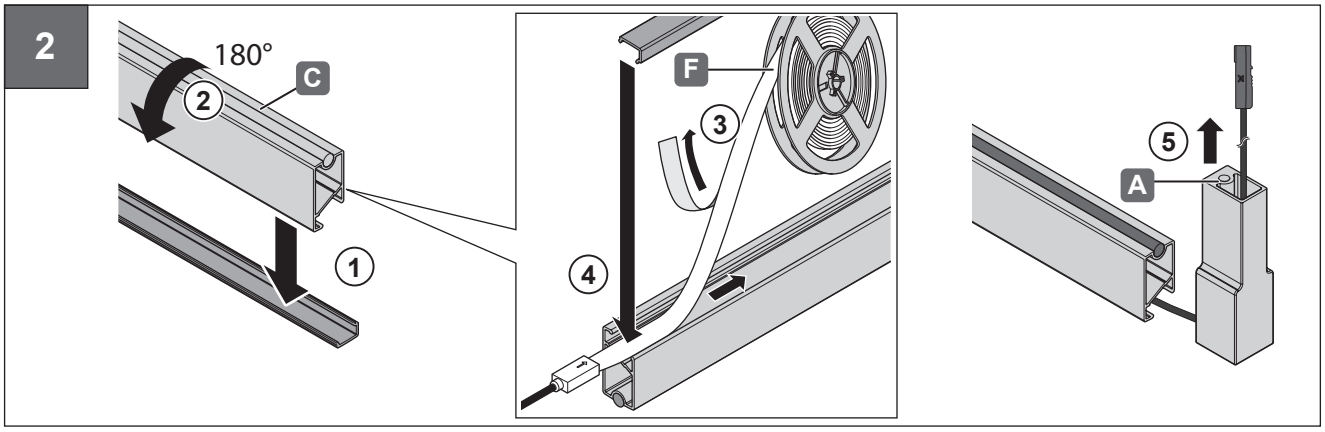

3

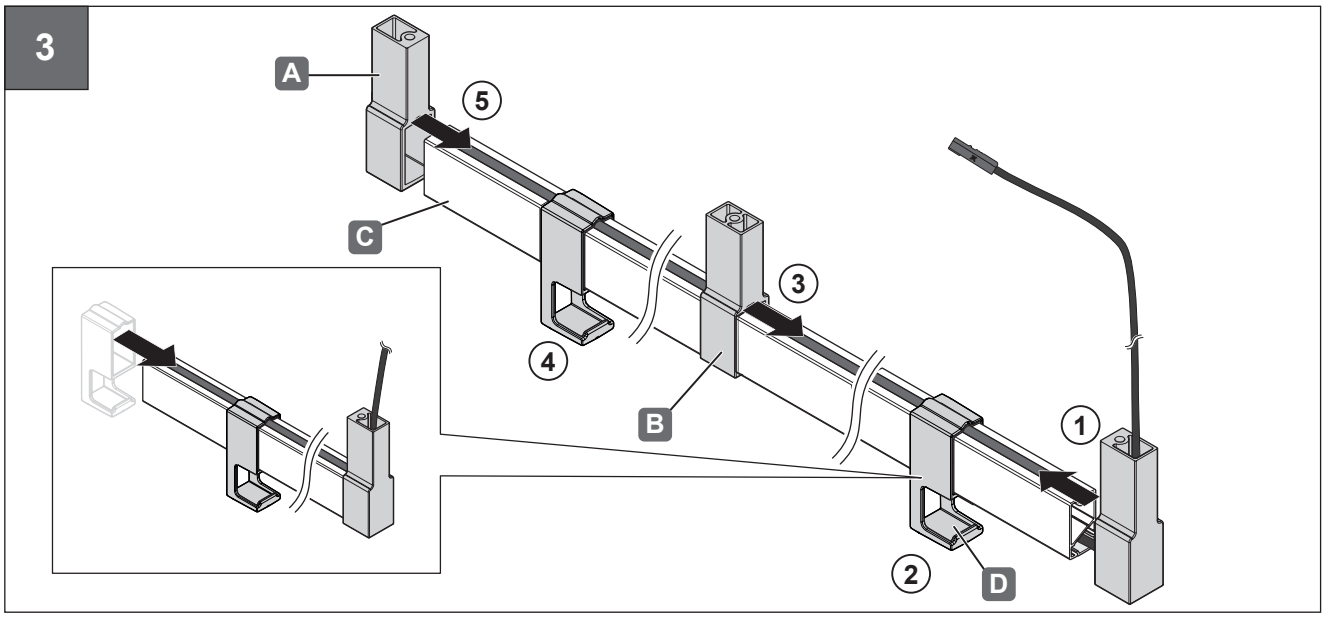

4

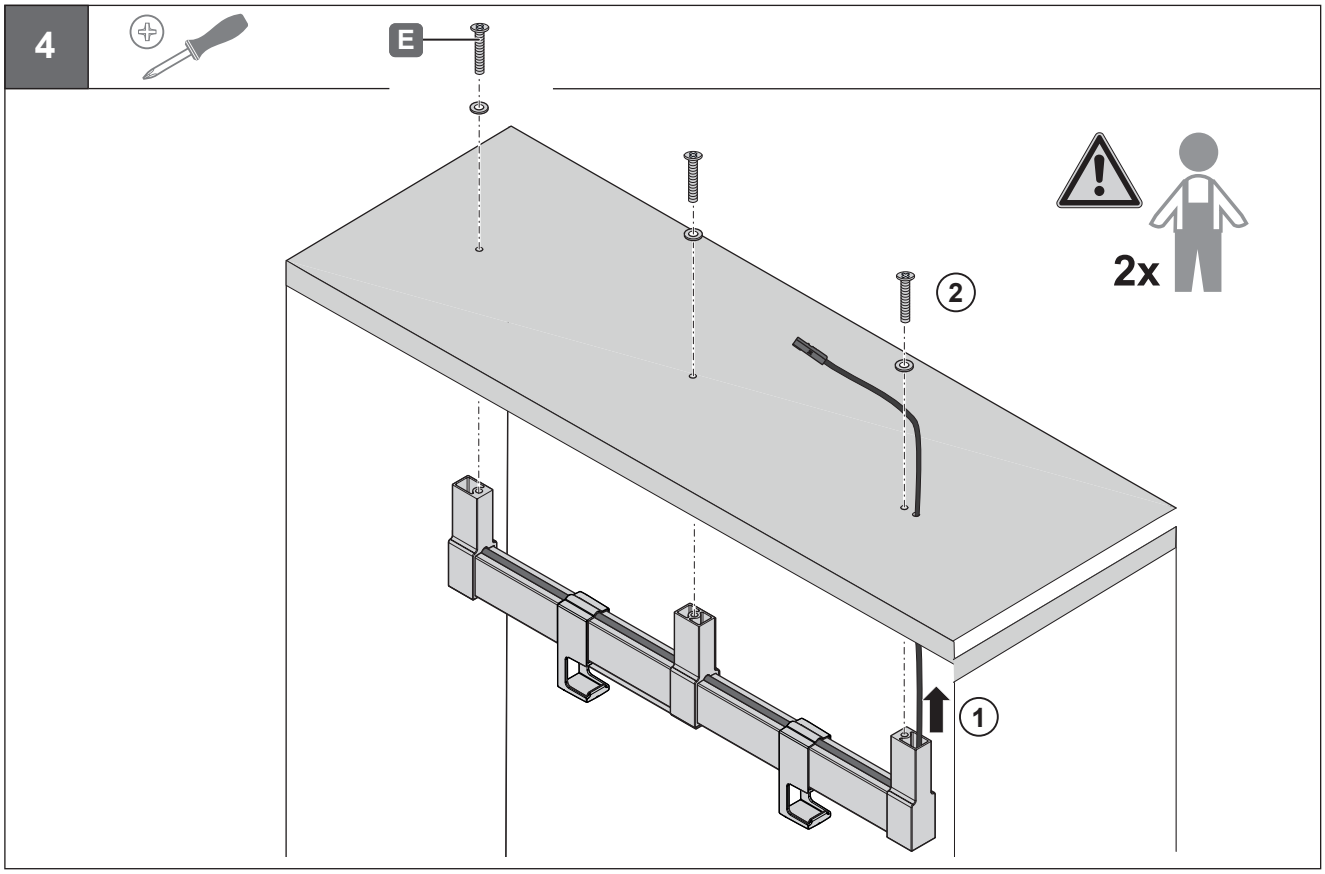

732.28.849

[WS138]

HDE 06.08.2024

Subject to alteration

© 2024 by Häfele SE & Co KG
Adolf-Häfele-Str. 1 · D-72202 Nagold · www.hafele.com