HÄFELE

OPERATING INSTRUCTIONS EN

DIX57FcL6a

ONLY USE THE APPLIANCE WHEN YOU HAVE READ AND UNDERSTAND THE OPERATING INSTRUCTIONS

IO-DWS-4097
(03.2024/2)

DISPOSAL OF OLD APPLIANCE

In accordance with European Directive 2012/19/EU and local legislation regarding used electrical and electronic goods, this appliance is marked with the symbol of the crossed-out waste container. This marking indicates that the appliance must not be disposed of together with other household waste after it has been used.

The user is obliged to hand it over to waste collection centre collecting used electrical and electronic goods. The collectors, including local collection points, shops and local authority departments provide recycling schemes.

Proper handling of used electrical and electronic goods helps avoid environmental and health hazards resulting from the presence of dangerous components and the inappropriate storage and processing of such goods.

CONTENTS

WE ARE ENVIRONMENTALLY FRIENDLY 3
BASIC INFORMATION 5
SAFETY INSTRUCTIONS 6
INSTALL THE APPLIANCE 13
DESCRIPTION OF THE APPLIANCE 14
CLEANING AND MAINTENANCE 28
INSTALL THE APPLIANCE IN A CABINET 34

WE ARE ENVIRONMENTALLY FRIENDLY

For many years, HÄFELE has consistently pursued pro-ecological policy.
Concern for the environment is as important for us as the use of modern technology.

The development of technology has enabled our factories to become more environmentally friendly – we use less and less water, electricity and less waste water and solid waste is generated in the production.

A lot of attention is paid to materials used in production. We strive to use only those that do not contain harmful substances and make recycling and safe disposal possible after use.

Dear customer!

Thank you for choosing an HÄFELE product. For years we have delivered high-quality appliances, so that household chores become a real pleasure. Before being packaged and leaving the manufacturer, this appliance was thoroughly checked with regard to safety and functionality. We also endeavour to make sure that modern technology in HÄFELE products always goes hand in hand with a unique design.

Before using the appliance, please carefully read these Operating Instructions Follow these instruction to avoid improper use and ensure long and reliable operation of the appliance. Learn the principles of the safe use to avoid accidents.

Store these operating instructions in a safe place to use them for reference whenever needed. These Operating Instructions contain all the necessary information that will make the use of your HÄFELE appliance simple and fun. We also encourage you to find out more about other HÄFELE appliances.

We hope using your new appliance is a pleasure.

HÄFELE

BASIC INFORMATION

Carefully read the operating instructions before plugging dishwasher to a power outlet and using the appliance. Operating instruction include tips that will help you avoid the risk of injury and damage to the appliance. Keep dishwasher documentation in a safe place for possible future use.

These operating instructions have been prepared for a range of appliances and some features described herein may not apply to your appliance.

MANUFACTURER'S DECLARATION

The manufacturer hereby declares that this product meets the requirements of the following European directives:

- Low Voltage Directive 2014/35/EU,
- Electromagnetic Compatibility (EMC) Directive 2014/30/EE,

- Eco-design Directive2009/125/EU,
- RoHS Directive2011/65/EU,

and has been marked with the CE symbol and issued with a declaration of compliance made available to market regulators.

Before you install the appliance

Check the appliance for transport damage. Never install or use a damaged appliance. If in doubt, contact your seller.

Before first use

See installation notes (below).

Refer the grounding system installation to a qualified electrician.

The manufacturer shall not be liable for any damage arising from the use of a non-grounded appliance.

Before using the appliance, verify that the data given on the rating plate matches that of local power outlets.

Do not plug in the appliance before and during installation.

Always use the original plug that came with the appliance.

Do not use an extension cord to connect the appliance to the wall outlet. Extension cords are not sufficiently safe (e.g. they may overheat).

Make sure the plug is easily accessible after installing the appliance.

Before first use

This appliance can be used by children aged 8 years and older or persons with physical, mental or sensory handicaps, or those who are inexperienced or unfamiliar with the appliance, provided they are supervised or have been instructed how to safely use the appliance and are familiar with the associated risks.

Ensure that children do not play with the appliance. Children should not be allowed to clean or maintain the appliance.

Children less than 3 years of age shall be kept away unless continuously supervised.

Child safety

Do not allow children to play with the appliance.

Dishwashing detergents can be caustic and irritate the eyes, mouth and throat.

Read the safety notes from detergent manufacturer.
Never leave children unsupervised when the appliance is open. It can contain residue detergent.
Dishwasher water is not suitable for drinking. Danger of injury from the caustic chemicals.
When you open the door during a programme, be careful as water temperature is high.
To avoid injury always place long and sharp/pointed items (e.g. forks, knives) in the cutlery basket, pointing down, or flat on the top rack.

Daily maintenance

Use the appliance for household dishwashing only.
Do not use solvents in the appliance as there is a risk of explosion.
Do not sit or stand on the open door and do not place any objects on it. The device may overturn.
Do not open the door when the appliance is operating. Hot water or steam can be released.
Do not leave the door open, because they it can pose a hazard.
Using a household dishwasher to wash tableware, typically requires less energy and water than washing by hand.

In case of problems

Refer repair and modifications of the appliance to qualified technicians only.
In the event of problems or repairs, unplug the appliance from the wall outlet:
Unplug the appliance by pulling the plug, turn off the circuit breaker.
Do not pull the power cord, pull the plug only. Close the water supply.

Recommendations

To save energy and water load your household dishwasher to the capacity indicated in this manual.

To save energy and water, rinse food residue of the dishes before loading the dishes into the dishwasher. Run the dishwasher with full load.
Do not put dishes with food leftovers in the appliance.
Use pre-wash programme only when needed.
Load bowls, cups and mugs bottom facing up.
Do not load in the appliance any dishes that are not dishwasher safe and do not load too many dishes.
Pre-rinsing tableware is not recommended as this increases water and energy consumption.

Dishes and utensils that are not suitable for dishwashers.

Ashtrays, candles, cleaning pastes, paints, chemicals, ferro-alloys;
Forks, spoons and knives with a handle made of wood, ivory or Nacre, glued items, items contaminated with abrasive powders, acid or base
Plastic dishes that are not resistant to high temperature, containers made of copper or tin;
Aluminium and silver items (may be stained or loose lustre)
Some delicate types of glass, porcelain with decorative prints, as prints may fade even after the first wash; some crystal dishes as they may lose their transparency, glued silverware sensitive to high temperatures, lead crystal glass, chopping boards, items made with synthetic fibres;
Absorbent objects such as a sponge or kitchen cloths are not suitable for the dishwasher.
Before buying dishes in the future make sure they are dishwasher safe.

UNPACKING

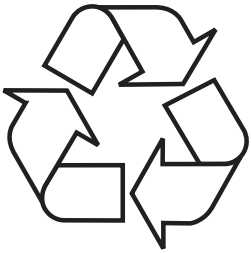

During transportation, protective packaging was used to protect the appliance against any damage. After unpacking, please dispose of all elements of packaging in a way that will not cause damage to the environment.
All materials used for packaging the appliance are environmentally friendly; they are 100% recyclable and are marked with the appropriate symbol.

Important! Packaging materials (bags, polyethylene, polystyrene, etc.) should be kept away from children during unpacking.

INSTALL THE APPLIANCE

PLACE YOUR APPLIANCE

- When choosing the place of installation, make sure you will be able to easily load and remove dishes and utensils from the dishwasher.
- Do not place the appliance in a room where the temperature can fall below 0°C.
- Before installing unpack the appliance following the instructions on the packaging.
- When you move the appliance do not handle it by the door or control panel.
- Leave some room on all sides to have convenient access to the dishwasher when cleaning.
- Make sure that when you set the dishwasher you do not crush the water supply and drain hose. Also, make sure that the appliance is not places on the power cord.
- Level the appliance using the adjustable legs. Proper level ensures trouble-free opening and closing the dishwasher doors.
- If the dishwasher door will not close properly, check that the appliance stands firmly on the floor, if not, adjust using the adjustable legs.

WATER SUPPLY CONNECTION

Make sure that domestic water supply system is suitable for the dishwasher. It is recommended to install a filter in the water supply line to avoid damage to the appliance due to impurities (such as sand, clay, rust, etc.) that occasionally occur in water. This will also prevent accumulation of sediment after dishwashing.

When connecting to drinking water make sure that you connect the appliance using a safety device against drinking water contamination through backflow (according to DIN EN 1717). We recommend that installation, including water supply and electrical connections, and repairs are carried out by a qualified technician.

WATER SUPPLY HOSE

Do not use the water supply hose from the old dishwasher. Use the new water supply hose provided with the appliance. Before connecting, rinse the hose with water. Connect the water supply hose directly to the water feed valve. The domestic water system pressure should be at least 0.03 MPa and up to 1 MPa. If the water pressure exceeds 1 MPa, install pressure reducing valve.
When the connection is ready, open the valve completely and check for leaks.
For safety reasons, close the water supply tap after every wash.

NOTE: Aquastop water supply is used in some dishwasher models. Dangerous voltage could occur with Aquastop. Do not cut the Aquastop water supply. Do not allow it to bend or twist

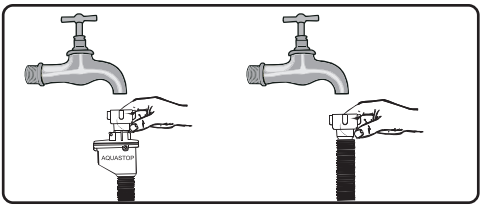

Note:
For safety reasons, close the water tap after every wash

THE DRAIN HOSE

The drain hose can be connected directly to a water drain or kitchen sink stub pipe. You can also drain the water directly into the sink using the special bracket (if available), placing the drain hose outlet on the kitchen sink edge. The drain hose connection should be made at least 50 cm and up to 110 cm from the floor.

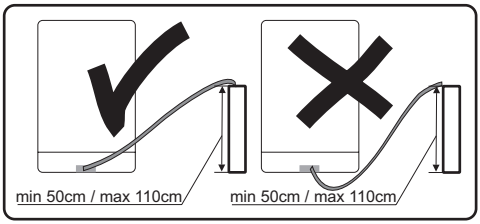

If the drain hose is longer than 4 m, dishes may not be washed properly. The manufacturer will not be held responsible.

ELECTRICAL CONNECTION

Grounded plug must be connected to a grounded power outlet with a proper voltage. If there is no grounding, refer this to a qualified electrician. If you operate the appliance without proper grounding, the manufacturer does not assume any liability for the possible resulting damage.

Domestic electrical system must be protected with a 10-16A fuse.
The appliance must be supplied with 220-240 V AC. If the supply voltage is 110 V, use 3000W, 110/220 V set-up transformer to connect the appliance. Do not connect the appliance during installation.

Always use the plug provided with the appliance. When you operate the appliance at lower voltage the dishwashing efficiency will deteriorate and may damage the appliance.

The power cord may only be replaced by authorized service or a qualified electrician. Failure to comply with these rules may lead to an accident.

For safety reasons, you should always unplug the appliance after you have finished using it.

In order not to avoid electric shock, do not remove the plug from the wall outlet with wet hands.

When you unplug the appliance from the wall outlet, always pull the plug. Never pull the power cord.

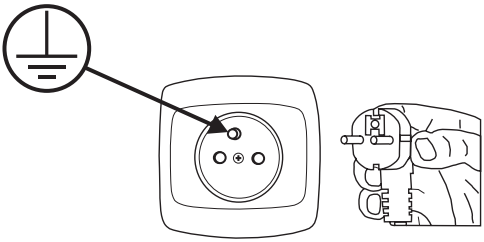

FEATURES AND COMPONENTS

DESCRIPTION OF THE APPLIANCE

The features and components of the appliance (fig. 1):

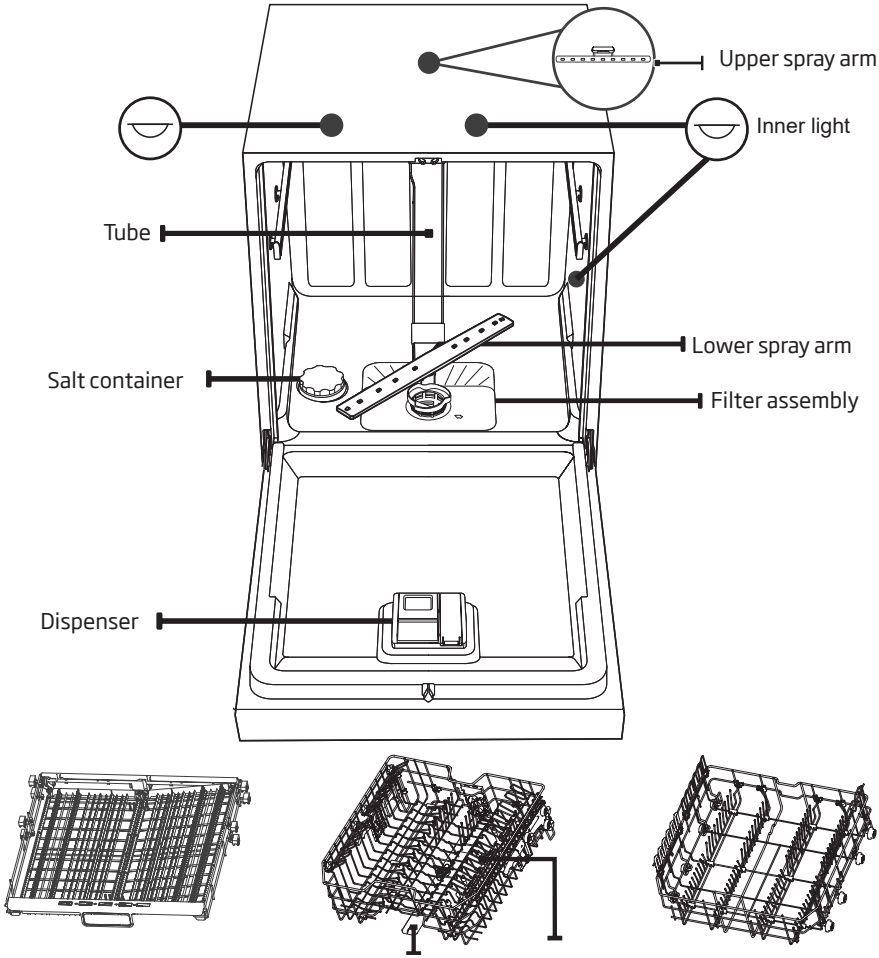

NOTE:
Figures are for illustrative purposes only Individual models may vary.

* on selected models: When you open the dishwasher door, the interior light will turn on automatically. The appliance interior is well lit.

DISPLAY AND CONTROL PANEL

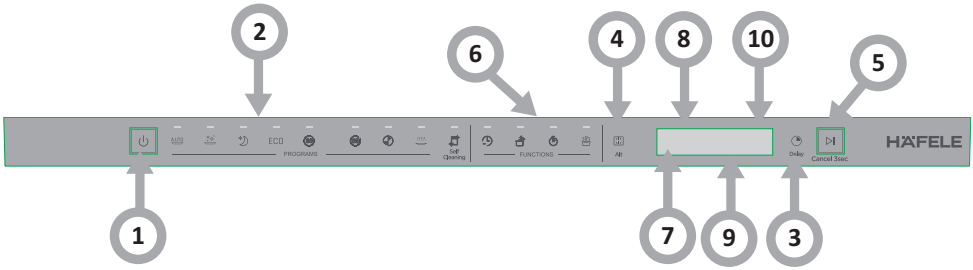

Device operation (buttons)	
1. On / Off	Press the button to turn on the dishwasher, the display will light up.
2. Programme	Auto AUTO A sensor is used in this programme to adapt the wash cycle to the level of soiling. Suitable for all types of dishes. Hygiene+ This programme is suitable for all types of dishes and levels of soiling. It provides the highest temperature for washing and disinfecting dishes. Silent This programme is suitable for normally soiled glasses and dishes. It runs quieter and can be used in the evening or at night. ECO ECO This is a standard programme for cleaning normally soiled tableware and it is the most efficient programme in terms of its combined energy and water consumption. Complete 90' 90' For washing normally soiled dishes requiring quick washing and drying. Complete 58' 58' For washing normally soiled dishes requiring quick washing and drying. Quick 35' This programme provides the shortest wash time for lightly soiled tableware, which does not require drying. Soak For rinsing dishes that you plan to wash later that day. Auto-clean This programme is used to effectively clean the dishwasher interior without any load of dishes.
3. Delayed Start	Press this button to delay the start time of the programme up to 24 hours in one-hour increments. When selected, the corresponding indicator lights up.
4. Alt (Zone Wash)	Press this button to select washing for the upper or lower rack only or both. The corresponding indicators will light up.

NOTE:
Figures are for illustrative purposes only Individual models may vary.

5. Start / Pause	Press this button to activate or stop a washing programme
6. Option	Extra Speed With this option, the wash cycle time will be reduced by 15% - 50%, depending on the temperature and wash cycle intensity. It cannot be selected in combination with the Auto, Quick 35', Soak and Auto Clean programmes (if the automatic door opening function is active at the same time). Power Wash To wash very dirty, hard to clean dishes. It can only be selected in combination with Hygiene 72, Silent, ECO, 90min and 58min. Extra Dry With this option, the drying effect will be improved by a higher temperature in the last rinse and an extended drying time. This option can only be selected in combination with the ECO, Hygiene+, Quiet and Complete 90' programmes. Open Dry on/off You can enable/disable the automatic opening of the dishwasher door at the end of the selected washing programme, which improves the drying quality. This option cannot be selected in combination with Quick 35', Soak and Auto Clean programmes.
7. Warning indicator	Rinse aid The indicator shows a low level of rinse aid in the dispenser. Add rinse aid. Special salt The indicator shows a low level of special salt in the dispenser. Add special salt. Water inlet valve The indicator is on when the water inlet valve is closed.
8. Alt indicator (Zone Wash)	Top rack washing only If you select the top rack option, only the dishes in the top rack will be washed. Bottom rack spray system not working. Bottom rack washing only If you select the bottom rack option, only the dishes in the bottom rack will be washed. Top rack spray system not working. Washing in the top and bottom rack alternately If both are selected, the dishes in the top and bottom rack will be washed. The top or bottom rack spray system will be operated alternately or both at the same time.
9. Display 8:88°C	Shows the remaining programme time, delay time, error codes, etc.
10. Consumption indicator (EcoBar)	Water consumption The consumption indicator shows the approximate water consumption for the selected programme. The more bars are displayed, the more water is used. Power consumption The consumption indicator shows the electricity consumption in the selected programme. The more bars are displayed, the higher the power consumption.

1

Before first use

- Before using the appliance, verify that the data given on the rating plate matches that of local power outlets.
- Remove all packing materials from inside of the appliance.
- Prepare special salt (water softener).
- Pour water into the special salt dispenser and then add about 1.5 kg of special salt (dishwasher salt).
- Pour rinse aid into the dispenser.

2

The importance of water descaling

A dishwasher requires soft water (with low calcium content) to operate efficiently. Otherwise, white residue main remain on the dishes and inside the appliance. This has a negative impact on the quality of dishwashing, rinsing and drying. When the water flows through the softener, ions responsible for the water hardness are removed, and the water becomes soft, for best dishwashing results. Depending on the degree of water hardness, the ions responsible for water hardness accumulate quickly inside the water softener. Therefore, the water softener must be regenerated to operate with the same efficiency during the next wash. This is why special salt is used in the dishwasher.

3

Add special salt

Only use special salt intended for dishwashers.
Any other type of salt that is not intended for use in a dishwasher, especially regular kitchen salt, will damage the water softener. In the event of damage caused by the use of the wrong salt, the manufacturer's warranty is void and we will not be liable for damage.
Fill with special salt before running the washing programme.
This will prevent spilled special salt or salty water from remaining on the bottom of the device, which may cause corrosion.

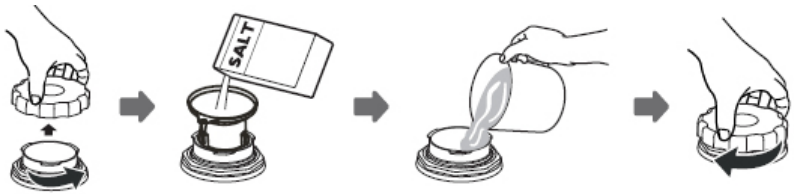

1. Remove the lower basket from the appliance and unscrew the special salt dispenser cap.
2. Place the end of the funnel (included) in the hole and pour about 1.5 kg of salt.
3. Pour water into the dispenser until full. It is normal that a small amount of water spills out of the special salt dispenser.
4. After you fill the dispenser, screw the cap on.
5. When you fil the dispenser with special salt, the add salt indicator goes out.
6. Start the washing programme immediately after filling the dispenser with special salt (the quick wash is recommended). Otherwise, salty water can damage the filters, the pump or other important appliance components This is not covered by the warranty.

NOTE:
Fill the special salt dispenser when the special salt indicator on the control panel lights up. Depending on the rate of salt dissolution, the special salt indicator may still be on even after filling the dispenser.

- If there is no special salt indicator on the control panel (on some models), you can estimate when to top up the dispenser based on the number of wash cycles performed.
- If some special salt spills, run the soaking programme or a quick wash programme.

Use only the special salt intended for dishwashers!

4

The test strip

The dishwashing effectiveness is linked to water hardness. Therefore, the appliance is equipped with a system to reduce the hardness of the water supply. The dishwashing effectiveness is improved when the system is set correctly. To check water hardness contact the municipal water company or determined the water hardness using test strip (if available).

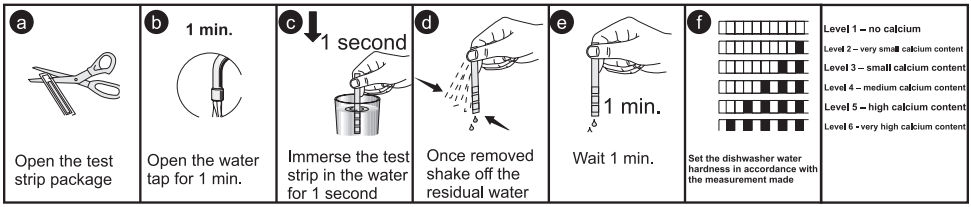

Fill the detergent dispenser

Open the detergent dispenser flap by pressing the detergent dispenser tab to release the lock as shown in the figure. The detergent dispenser features volume marking. Using these markings (lines) you can measure the correct amount of detergent. The dispenser can accommodate a maximum of 30g of detergent.

Open the pack with dishwasher detergent and in the case of heavily soiled dishes pour 25 cm³ detergent into the main wash compartment (A) or 15 cm³ for less soiled dishes (B). If the dishes remained unwashed for an extended period of time or if food has dried, pour 5 cm³ detergent into the pre-wash compartment and start the dishwasher. Depending on the amount of soil and the water hardness you may need to add more detergent.

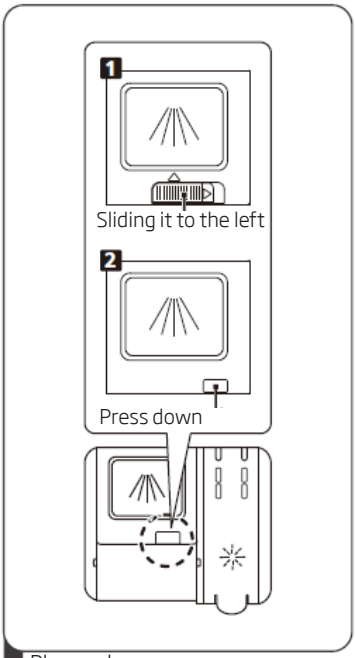

1 Please choose an open way according to the actual situation.
1. Open the cap by sliding the release catch.
2. Open the cap by pressing down the release catch.

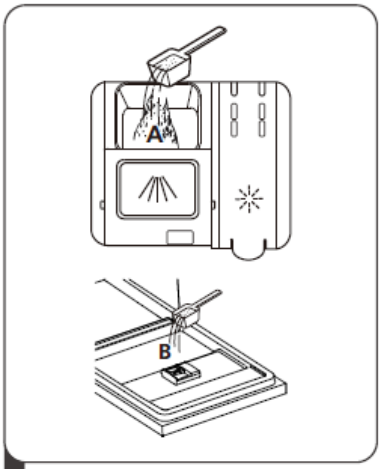

2 Add detergent into the larger cavity (A) for the main wash cycle .
For better cleaning result, especially if you have very dirt items, pour a small amount of detergent onto the door. The additional detergent will activate during the pre-wash phase.

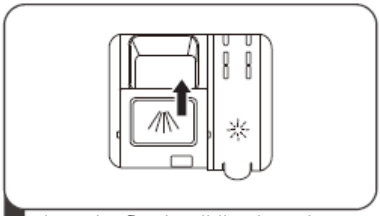

3 Close the flap by sliding it to the front and then pressing it down.

Please note that the setting may be different depending on the water contamination. Follow the manufacturer's instructions on the detergent packaging.

6

Multi-component (multitab) detergents (eg. 2-in-1, 3-in-1, etc.)

There are three types of detergents:
1. Containing phosphates and chlorine,
2. Containing phosphates and no chlorine,
3. Containing no phosphates and no chlorine.

The latest tablets are generally phosphate-free. Since phosphates have water softening properties, we recommend adding salt to the container even if the water hardness is only 6°dH. If you use phosphate-free detergent where water is hard, white residue may be visible on the dishes.

You can prevent this by increasing the amount of detergent. Chlorine-free detergents have less bleaching effect. Stains may not be entirely removed. Select the programme with a higher wash temperature.
Generally, using multi-component detergents suitable results are obtained only under certain conditions. Such detergents contain rinse aid and/or special salt in a specific amount. It is recommended to use special salt when using multi-component tablets.

7

What you should pay attention to when using these tablets.

- Always check the type of detergent used and whether it is a multi-component product.
- Make sure that the detergent used is appropriate for tap water hardness.
- Follow the instructions on the product packaging.
- If the detergent is in the form of tablets, never place it the cutlery basket. Always place the tablet in the detergent dispenser compartment.
- The use of these detergents yields good results only in certain applications. Using this type of detergent you should contact the manufacturer for information about proper use.
- If you use the detergent properly and dishwasher settings are correct you can save on salt and/or rinse aid.
- If dishwashing results while using 2-in-1 or 3-in-1 detergents are not satisfactory (traces of lime scale on the dishes), please contact the detergent manufacturer. The warranty does not cover complaints due to the use of multi-component detergents.

Recommended use: For best results using multi-component cleaning agents, add special salt and rinse aid in the dishwasher and set the water hardness and amount of rinse aid to the lowest setting.

The solubility of the detergent tablets made by different manufacturers can vary with regard to temperature and time. It is therefore not recommended to use detergent tablets in quick programmes. It is recommended to use powder detergents in quick programmes.

Always store detergents in a dry, cool place, out of reach of children. Add detergent to the dispenser immediately before using the appliance.

Warning: If encounter another problem when using a multi-component detergent, please contact the detergent manufacturer.

Stop using multi-component detergents

- Add special salt and rinse aid to dispensers.
- Set the water hardness to the highest level (6) and run an empty dishwasher.
- Adjust the water hardness.
- Adjust rinse aid setting.

8

Add rinse aid to the dispenser and adjust setting

Use rinse aid to prevent the formation of white water drops, lime scale spots, white streaks that may occur on the dishes, as well as to improve the drying process. Contrary to popular belief, it not only serves to obtain a shiny dishes, but also to facilitate drying. For this reason, make sure there is always sufficient amount of rinse aid in the dispenser.

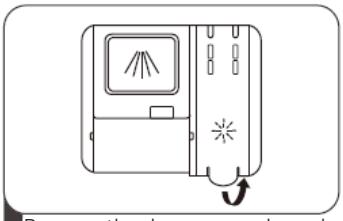

1 Remove the rinse reservoir cap by lifting up the handle.

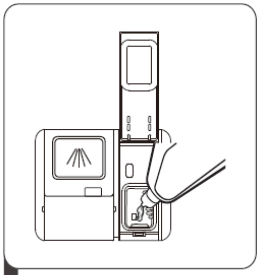

2 Pour the rinse aid into the dispenser, being careful not to overfill.

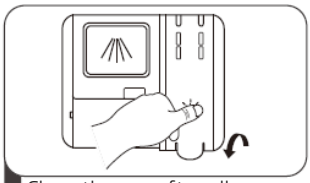

3 Close the cap after all.

Adjust the rinse aid dispenser

To achieve better drying results you can adjust how much rinse aid is used.
Follow these steps.

1. Open the door. Turn on the appliance.
2. Within 60 seconds of turning on the appliance, press and hold the Auto Clean button for more than 5 seconds. Then press the Delay Start button to enter the rinse aid settings mode. The rinse aid indicator will flash.
3. Press the Auto Clean button again to select a setting as desired. The settings change in the following order: d3->d4->d5->d6->d1->d2->d3. The higher the number, the more rinse aid is dispensed. The default setting is D3.
4. To complete and exit setup, simply wait 5 seconds or press the power button.

Warning: Use only rinse aid designed for domestic dishwashers. Wipe up spilled rinse aid with a cloth as it will cause the formation of large amounts of foam, and thus will reduce the dishwashing effectiveness.

Water hardness table

Water hardness	German degrees [dH]	French degrees [dF]	British degrees [dE]	Water hardness level indicator	Regeneration occurs every X wash cycles[1)]	Special salt consumption [g/cycle]
1	0~5	0~9	0~6	H1	No regeneration	0
2	6-11	10-20	7-14	H2	10	9
3	12-17	21-30	15-21	H3	5	12
4	18-22	31-40	22-28	H4	3	20
5	23-34	41-60	29-42	H5	2	30
6	35-55	61-98	43-69	H6	1	60

If the water hardness is higher than the maximum values given in the table above, or if you use water from a deep well, it is recommended to use filters and water treatment equipment.

NOTE: The factory settings are for the water hardness level 3.

1. Open the door. Turn on the appliance.
2. Within 60 seconds of turning on the appliance, press the Auto Clean button for more than 5 seconds to enter the water softener setting mode.
3. Press the Auto Clean button again to select the desired setting suitable for your local conditions. The following settings are available: H3->H4->H5->H6->H1->H2->H3;
4. Press the power button to save the setting and exit the setting mode.

The use of detergents

Use a detergent for domestic dishwashers. On the market you can find detergent intended for dishwashers in the form of powder, gel and tablets. The detergent must be placed in the dispenser before starting the dishwasher. Store detergent in a cool and dry place, out of reach of children.
Do not overfill the detergent dispenser, otherwise the detergent may not dissolve completely and leave streaks on the dishes.
If you need more information on the detergent used, please contact the manufacturer directly.

[1)] Each cycle with regeneration stage uses an additional 3.0 litres of water, the energy consumption increases by 0.02 kWh and the programme duration is extended by 4 minutes.

1

Upper rack

The top rack is designed for washing delicate dishes such as glasses, cups, plates, etc. Dishes that are placed in the top rack should be less soiled than dishes in the bottom rack.

You can place long forks, knives and spoons horizontally on shelves so as not to obstruct the spray arms.

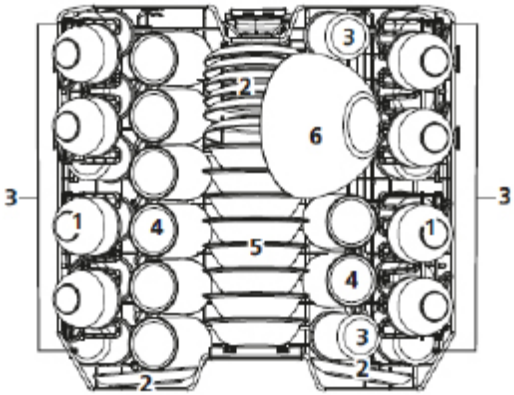

2

Fold the mugs and cups shelves

Fold the shelves to increase the capacity of the upper rack. You can place the glasses and mugs on the shelves. Raise the cup shelf to make more space in the rack for taller items. You can then lean the taller glasses against the shelf. It can also be removed if it is not needed.

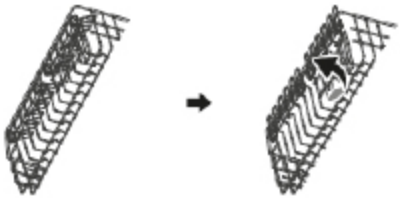

NOTE:
When the top rack is locked in the top position, the cup shelves cannot be folded down.

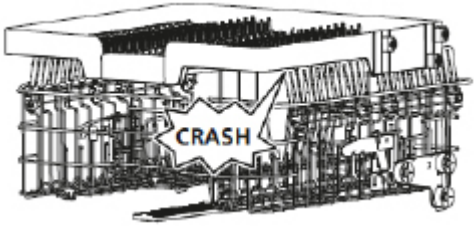

CRUSH

3

Fold the dishwasher basket spikes

The spikes are used to hold the plates. They can be folded, making more room for large dishes.

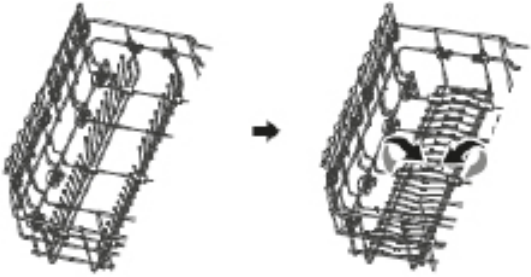

lift lower

4

Rack loading tips:

Adjust the upper basket

1. To raise the top rack, simply lift it by the centre of each side until it locks into place in the top position. There is no need to lift the adjuster handle.

2. To lower the top rack, pull up both adjuster handles. Make sure that the rack lowers equally on each side.

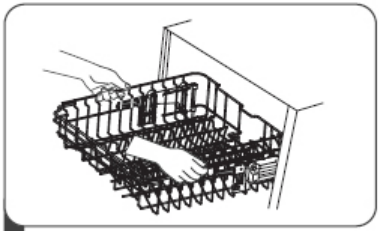

1

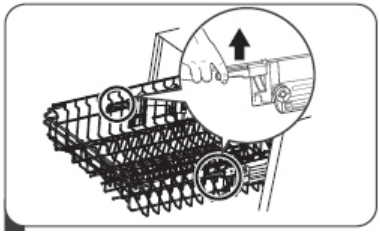

2

5

Bottom rack
Place the plates, bowls, pots, etc in the bottom rack. Make sure that the dishes in the bottom rack do not block spray head and it can freely rotate. Place large pans and heavily soiled items such as pots, pans, lids, dishes, etc. in the bottom rack. Place dishes upside down, so that water does not collect inside.

Place the dishes in such a way that they do not block the spray head.

The standard load and test results
Capacity:
The upper and bottom rack: 16 place settings. Set the upper rack to the upper position. Place the cups on the shelves.
Detergent/rinse aid
5 +19g, in accordance with EN 60436 international standard / rinse aid dose: max
Test programme
Eco, in accordance with the EN 60436 international standard

Upper rack

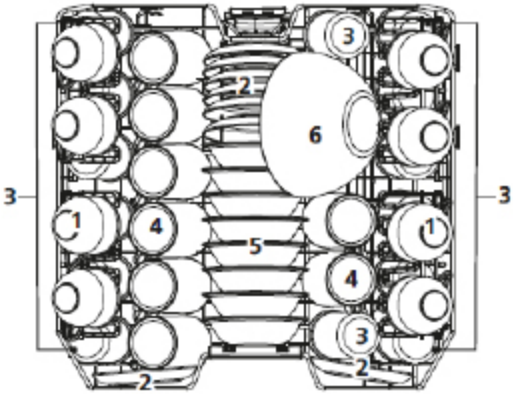

1. Cups
2. Cup saucers
3. Glasses
4. Mugs and cups
5. Dessert bowls
6. Glass salad bowl
7. Deep soup bowls
8. Melamine bowls
9. Dessert plates
10. Melamine dessert plates
11. Dinner plates
12. Small pot
13. Baking bowl
14. Oval platter

Bottom rack

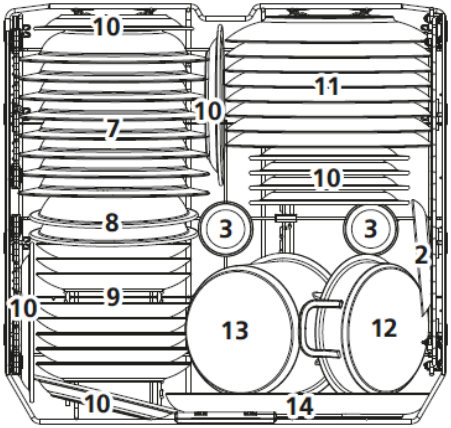

Cutlery basket

Place knives and forks separately from each other, and make sure they do not touch as this may cause poor washing results.
For best washing results place knives and forks in the cutlery rack, and make sure: they do not touch and place objects in the middle.

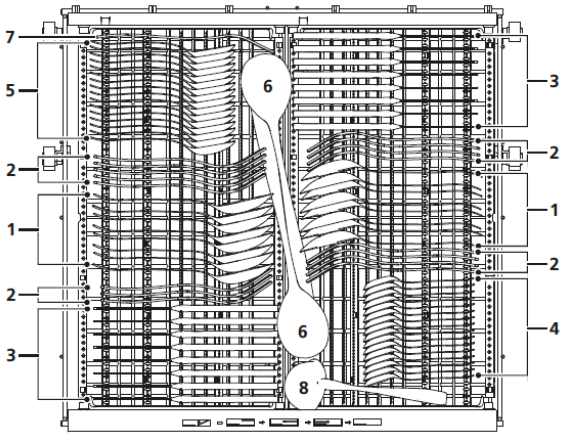

Item	Cutlery
1	Soup spoons
2	Forks
3	Knives
4	Tea spoons
5	Dessert spoons
6	Forks for serving
7	Serving spoons
8	Soup spoons

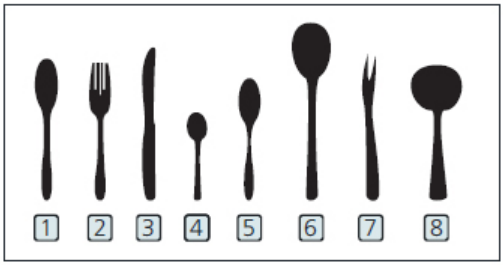

Cutlery Rack Used Tips

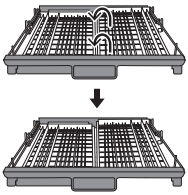

Lift the right basket up, both left and right baskets are flat.

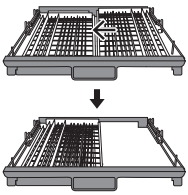

Move the right basket from right to left, two basket are overlapping.

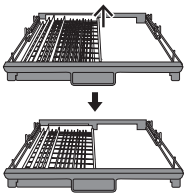

Remove the right basket from the tray, only has the left basket.

1

Turn on the appliance

1. Slide out the upper and lower the rack, place the dishes inside and slide racks back in the dishwasher. It is recommended to first load the lower rack and then the upper rack.
2. Pour detergent.
3. Insert the plug into the wall outlet. Make sure that the water supply is turned on and set to the maximum pressure.
4. Open the door, press the on/off button.
5. Select a programme and press the Start button. Close the door. Dishwasher will start.

2

Change programme

You can change the programme only if it runs for a short time. Otherwise the detergent is already dissolved in water and the water could be pumped out. In this case, refill the dispenser with detergent and start the washing program from the beginning. To reset your dishwasher, please follow the instructions below:
1. Open the door to stop the washing program. You can open the door completely when spray arms come to a stop.
2. Press and hold the Start/Pause button for more than 3 seconds. The appliance will enter the programme selection mode.
3. Now you can select your desired programme.
4. Press the Start/Pause button and close the door. The dishwasher will restart.

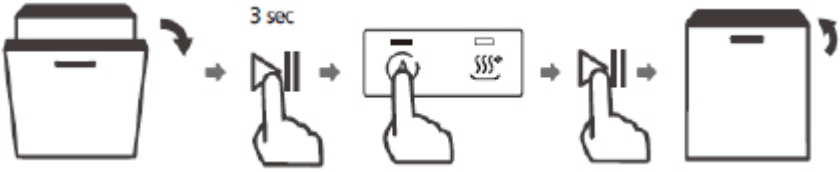

3

Add dishes during the programme:

You can add extra dishes at any time before detergent is released. In this case, follow the instructions below:
1. Open the door to stop the washing program.
2. You can open the door completely when spray arms come to a stop.
3. Add the dishes.
4. Close the door, the dishwasher will resume operation after 10 seconds.

WARNING:
Be careful when opening the door during the dishwashing programme as hot steam can be released and cause scalding.

The dishwashing programme completes

Press on/off button to turn off the appliance. Close water supply tap and open the dishwasher door. Wait a few minutes before unloading the dishwasher. Allow dishes to cool. Hot dishes are more susceptible to breakage. Also the dishes will dry.

Turn off the dishwasher
The programme is completed only when the programme indicator is on, but not flashing.
1. Press on/off button to turn off the appliance.
2. Close water supply tap!

Open the door carefully.
Hot dishes are more susceptible to breakage. Before unloading the dishwasher leave the dishes to cool for about 15 minutes.
Open the dishwasher door, leave it ajar and wait a few minutes before removing the dishes. This will allow the dishes to cool and dry.

Unload the dishwasher
It is normal that the dishwasher interior is wet.
First remove dishes from the lower rack and then from the upper rack. This will avoid water dripping from the upper rack on the dishes in the lower rack.

OpenDry . Automatic door opening.
At the end of the programme, the dishwasher door opens automatically, improving the drying results while using less energy. Pres and hold down the Start Delay and Alt buttons simultaneously for approximately 2 seconds to enable / disable the automatic door opening function. A relevant indicator will light up

If the automatic door opening function is used, do not obstruct the door. This may interfere with the operation of the door lock.
This function does not apply to the Quick Wash and the Soak programme.

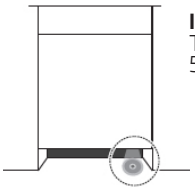

Indicator lamp function
The Indicator lamp will be lit up during the washing program, then blink for 5 minutes and extinguished on the end of the program.

Drain water
The dishwasher has a water tank that holds the water. At indoor temperature below 0°C, the water in the tank may freeze. Therefore, we do not recommend running the dishwasher when the indoor temperature is below 0°C. We recommend emptying the water in the tank when the environment is below 0°C to avoid freezing in the machine. When opening the door, long press the Auto button and the Turbo speed+ button for 3 seconds,then closing the door to enter the drainage function. All the program indicator lights are on, and the screen displays -: - - to enter the drainage state. Water in the tank will be drained in 4 minutes. If the door is opened during the drainage process, the machine will suspend the drainage, and the machine will continue to drain after closing the door.

1

Clean external surfaces

Door and door seal

To remove food residue, clean the door gasket regularly with a soft, moist cloth.
When loading dishes into the dishwasher, food and drink residue may deposit on the sides of the dishwasher door. These surfaces are outside the dishwasher compartment and the water from the spray arms does not reach them. Remove any residue before closing the door.

Control Panel
Wipe the control panel ONLY with a soft, damp cloth.

WARNING
Do NOT use any spray cleaner to prevent water ingress into the door lock and electrical components.

Do not use any abrasive detergents or sharp cleaners on external surfaces. Some paper towels may also leave scratches or marks on the surface.

2

Clean internal surfaces
Filter system

The filter system at the bottom of the dishwasher compartment stops coarse residue during wash cycle. This residue can cause clogging of the filters. Regularly check the condition of the filters and rinse them under running water, if necessary. Clean the filters as follows.

NOTE:

Figures are for illustrative purposes only Filter systems and spray arms may vary in individual models.

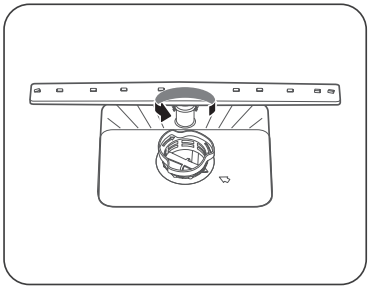

1

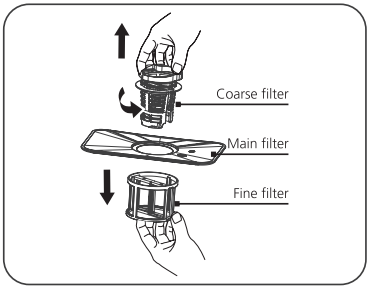

2

1. Hold the strainer and turn it counter clockwise to unscrew. Lift the filter up and remove it from the dishwasher.

2. The fine filter can be removed from the bottom of the filter assembly. The strainer can be disengaged from the main filter by gently squeezing the edges and pulling.

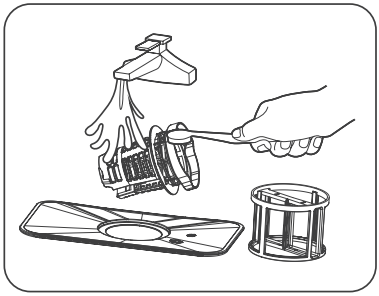

3

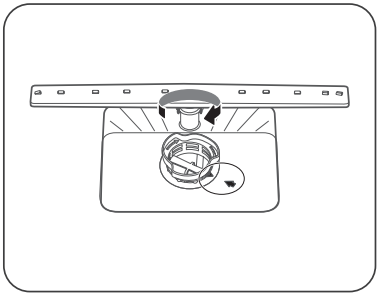

4

3. Larger residues can be rinsed under running water. Clean the filter completely with a soft, clean brush.

4. Install the filters in reverse order, place the filter insert and turn clockwise as indicated by the arrow.

WARNING
Do not overtighten the filters. Carefully replace the filters and install in place. Otherwise, contaminants can enter the dishwasher's systems and cause clogging.

NEVER use the dishwasher without the filter assembly. Incorrect filter replacement can reduce the appliance effectiveness and cause damage to the dishes and cutlery.

3

Spray arms

Clean the spray arms regularly. Hard water and detergents can clog the nozzles and the spray arm slide rings.

Clean spray arms:

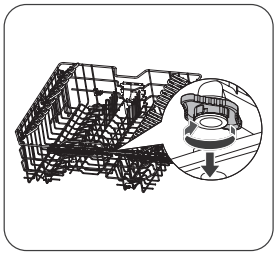

1

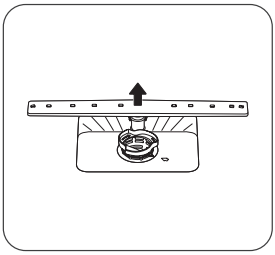

2

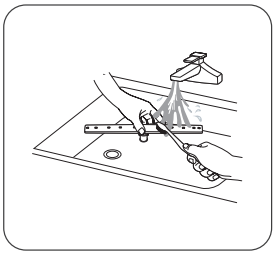

3

1. To remove the upper spray arm, hold the nut in place and turn the arm counter clockwise.
2. To remove the lower spray arm, pull the arm up.
3. Clean the spray arms with a soft brush in warm soapy water. Rinse the arms and install in the appliance.

Clean the dishwasher

Frost protection

In winter, the dishwasher must be protected against freezing temperature. After each wash:

1. Disconnect the dishwasher from power.
2. Turn off the water supply and disconnect the water inlet hose from the water valve.
3. Drain the water from the inlet hose and the water valve. (Collect the water in a bowl)
4. Reconnect the water inlet hose to the water valve.
5. Remove the filter and use a sponge to collect the water from the bottom of the dishwasher.

After each wash

After each wash, close the water supply to the appliance and leave the door slightly ajar, so that moisture and odours are not trapped inside.

Unplug the appliance

Always unplug the appliance from the wall outlet before any cleaning and maintenance.

Do not use solvents or abrasive detergents.

Do not use solvents or abrasive detergents to clean the outer parts and the rubber seals of the dishwasher. Use only cloths and warm soapy water.

To remove stains from the inside use a cloth dampened with water and a little vinegar or cleaning detergent intended specifically for dishwashers.

If the dishwasher is not used for a long time

It is recommended to run the washing programme with an empty dishwasher, then unplug the appliance from power, close the water supply and leave the door slightly ajar. This protects the gaskets and prevents the formation of unpleasant odours in the appliance.

Move the appliance

If the appliance needs to be moved, try to keep it in an upright position. If absolutely unavoidable, you can rest the appliance on the back wall.

ERROR CODES AND TROUBLESHOOTING

In the event of a fault, the dishwasher displays error codes that identify the problem:

ERROR CODE	DESCRIPTION OF THE FAULT	ACTION
E1	Long water filling time.	Tap is closed, water intake is clogged, or water pressure is too low
E3	The required temperature has not been reached.	Malfunction of heating element.
E4	Water overflow.	Some dishwasher element leaks.
Ec	Washing control system malfunction.	Electronics, drain pump or motor malfunction
L4	Motor malfunction	Motor malfunction
C4	Drain pump malfunction	Drain pump malfunction
Ed	Communication failure between main and display PCB.	Open circuit or damage to communication connections.

WARNING:

- If overflow occurs, turn off the main water valve before calling for service.
- If there is water in the bottom tray due to overflow or a small leak, empty the water before starting the dishwasher.
- Seek professional help, if an error code appears that cannot be cleared.

Problem	Possible cause	Solution
The dishwasher will not start	The dishwasher will not start	The dishwasher door is open – close the door.
	The appliance is not connected to the mains power The Delay start function is selected	Close the door carefully, make sure it is closed fully
	Child Lock is enabled (selected models)	Turn off the Child Lock
The dishwasher beeps at the end of the wash cycle	It indicates the end of the wash programme and emits a beep	
The rinse aid indicator is on	The LED display shows "Lsb"	Add rinse aid
The wash cycle takes too long	The dishwasher is connected to hot water	Check the dishwasher, make sure it is properly connected to hot water
	The duration of the wash programme varies depending on how soiled the dishes are	When heavy soil is detected, auto and normal programmes, automatically extend the wash cycle duration
	The disinfection option has been selected	When you select the disinfection option, the wash cycle time will be extended to reach the disinfection temperature
The dishes are not clean enough	The water pressure is temporarily low	Use a dishwasher when the pressure is normal
	The temperature of the inlet water is low	Ensure that the dishwasher is connected to hot water. Try not to use the dishwasher if hot water is used elsewhere in the household
	The dishes are arranged too close together. The detergent is used incorrectly	Rearrange the dishes in accordance with the instructions. Use the amount of detergent suitable for the water hardness and the selected wash programme. Use a new/different detergent
	The selected wash programme is not suitable for the level of soil on the dishes	Select a different, more intensive/longer wash programme
	The spray arm rotation is blocked	Make sure that the spray arm rotates freely

Problem	Possible cause	Solution
The dishwasher will not start	The dishwasher will not start	Close the door carefully, make sure it is closed fully
	The appliance is not connected to the mains power The Delay start function is selected	Check the connection to the power supply
		To change the setting, refer to the Start Delay section in the operating instructions
	Child Lock is enabled (selected models)	Deactivate the Child Lock function, refer to the Child Lock section in the operating instructions.
The dishes are not dry enough	The detergent dispenser is empty	Fill the rinse aid dispenser or increase the dispensed amount
	Dishes placed incorrectly in the dishwasher	Rearrange the dishes in accordance with the instructions.
	The selected programme dose not include the drying stage	Select the wash program that includes drying
Stains and deposits on dishes	Water too hard	In the case of very hard water, a water softener should be installed
	Dishes placed incorrectly in the dishwasher	Rearrange the dishes in accordance with the instructions.
	An old rinse aid was used	Use new rinse aid
	Rinse aid dispenser is empty	Add rinse aid to the dispenser
	Too much detergent	Use less detergent if water is soft
	The temperature of water supplied to the dishwasher exceeds 70°C	Reduce the temperature of the water supply
The detergent was not fully released from the dispenser	The detergent may be too old	Use a new/different detergent
	The spray arm rotation is blocked	Rearrange the dishes making sure that the spray arm rotation is not restricted
The detergent dispenser will not close	The lid of the detergent dispenser is malfunctioning	Add detergent and rinse aid according to the instructions
The water was not drained from the dishwasher	The previous programme was not completed or was interrupted	For information on how to select a suitable wash programme, please refer to the operating instructions

Problem	Possible cause	Solution
The dishwasher does drain the water properly	The drain is clogged	Check the air trap.
	The drain hose is bent	Make sure that the drain hose is correctly connected to the drain
Foam in the dishwasher	The wrong detergent was used	Make sure that the detergent used is suitable for dishwashers
The dishwasher is leaking	The use of the wrong detergent resulted in a deposit	Make sure that the detergent used is suitable for dishwashers
	The dishwasher is not levelled	Level the dishwasher
Black or grey streaks on the dishes	The aluminium dishes rubbed against the plates.	Rearrange the dishes
The interior of the dishwasher is stained	Coffee and tea grounds	Use a certified stain removal agent
	A reddish stain	Load the dishes and run the rinsing programme which will reduce the stain formation
Noise	Noise of the detergent dispenser lid opening or water drain pump operating	This is normal.
	A hard object in the dishwasher's system. When the object drops to bottom, the noise should stop	If the noise continues after the full wash cycle, call service.
The appliance does not fill with water	The water tap is shut off	Check that the water tap is open
	The door lock may not be engaged	Make sure that the door is closed.
The water was not drained from the dishwasher	Food residue or glass shards clogged the pump.	Remove foreign body.

INSTALL THE APPLIANCE IN A CABINET

Built-in installation (for an integrated model)

Step 1. Choose the optimal location for your dishwasher

The best location to install the dishwasher is near the water tap, the drainage inlet and an electrical wall socket. For details, please see the figure presenting cabinet dimensions and dishwasher place of installation.

1. A clearance of 5 mm between the top of the dishwasher and the cabinet, and the door flush the cabinet.

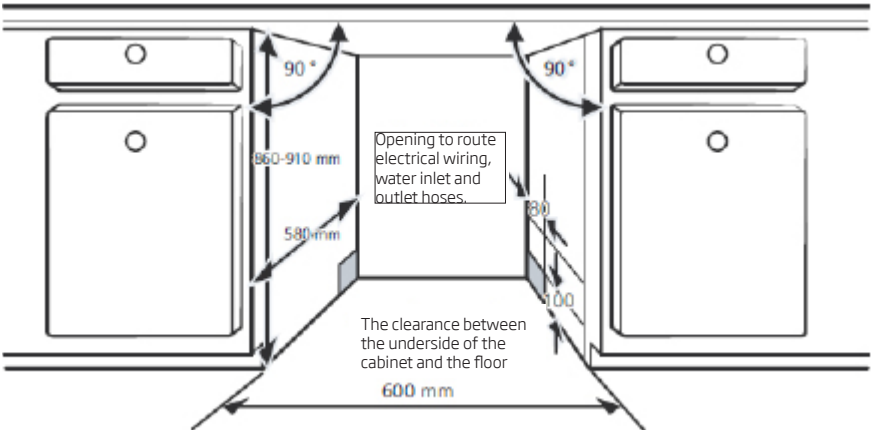

2. When installing the dishwasher in the corner cupboard, leave room for the door to open.

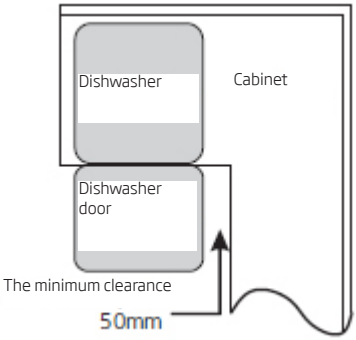

NOTE:

Depending on the location of the wall electrical socket, you may need to cut the opening in the cabinet rear wall.

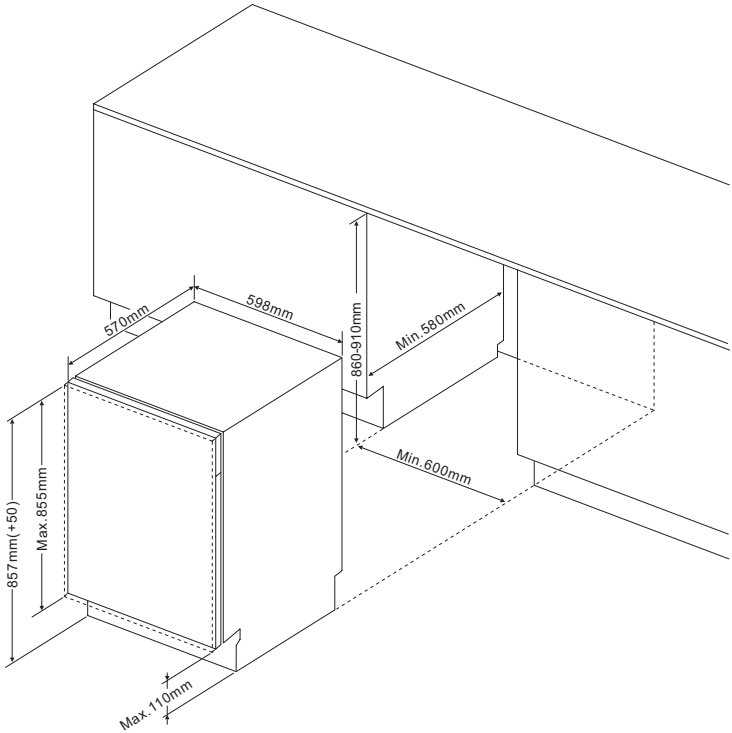

The correct weight of the furniture board:
* For 60 cm with a fully enclosed panel - in the range of 4-11 kg

Step 2. Dimensions and installation of the decorative panel

Install the hook on the decorative wooden panel and place the hook in the socket on the dishwasher door (see Figure A). After adjusting the wooden door, fasten it to the dishwasher door using screws and bolts (see figure B)

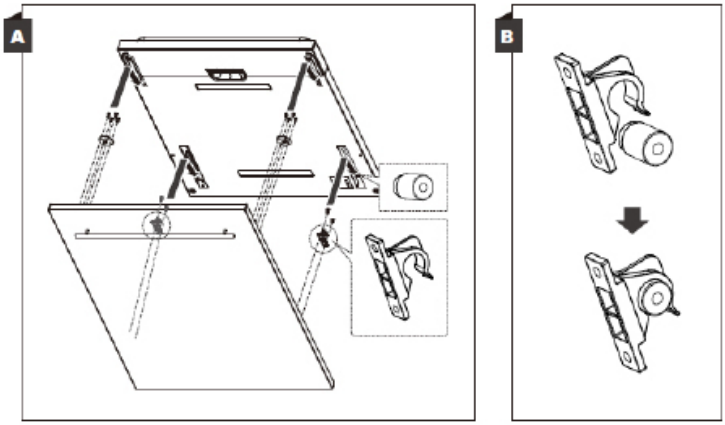

Step 3. Dishwasher installation steps

For other installation steps please see the installation instruction drawings

1. Affix the condensation strip under the work surface of cabinet. Please ensure the condensation strip is flush with edge of work surface.
2. Connect the inlet hose to the cold water supply.
3. Connect the drain hose.
4. Connect the power cord.
5. Place the dishwasher into the cabinet.
6. Level the dishwasher. The rear foot can be adjusted from the front of the dishwasher by turning the Philips screw in the middle of the base of dishwasher use a Philips screw driver. To adjust the front feet, use a flat screw driver and turn the front feet until the dishwasher is level.
7. Install the furniture door to the outer door of the dishwasher.
8. The dishwasher must be secured in place. The fixed operation is as follows:

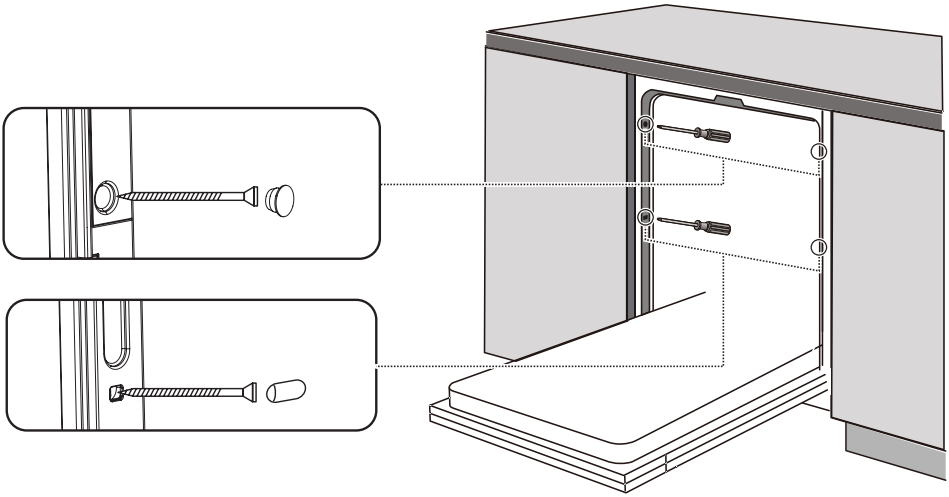

NOTE: Always ensure that there is a sufficient gap between metal furniture components such as handles, fittings, furniture fronts and the surface of the control panel buttons. If the gap is insufficient, functions may be triggered inadvertently and the dishwasher may malfunction.

Step 4. Level the dishwasher

The dishwasher must be properly levelled to operate correctly.
Place the spirit level on the door and the rack guides inside the dish washer to ensure the unit is level.
Level the dishwasher by adjusting the three levelling feet separately.
Be careful not to topple the dishwasher when levelling.

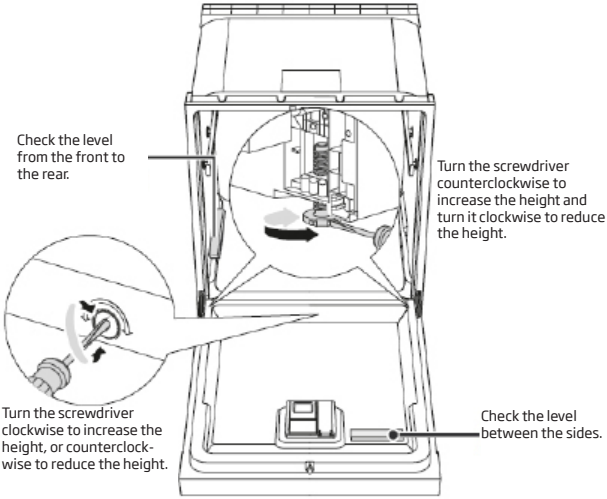

NOTE:
The height adjustment range of the feet is 50 mm.

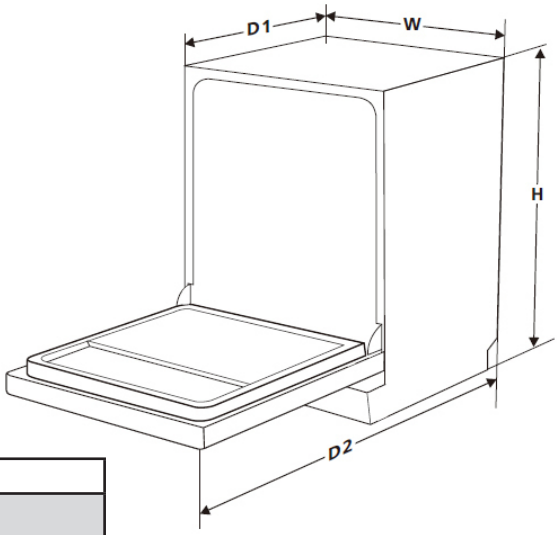

Height [mm] [H]	857 mm
Width [mm] [W]	598 mm
Depth [mm] [D1]	550 mm (with the door closed)
Depth [mm] [D2]	1226 mm (with the door open 90°)

For more information about the product, please refer to the EU EPREL Product Database at https://eprel.ec.europa.eu. For more information, please use your mobile device to scan the QR code on the energy label or enter the product model listed on the energy label in the EPREL search engine https://eprel.ec.europa.eu/

WARRANTY AND AFTER SALES SERVICE

Warranty

Warranty service as stated on the warranty card. The manufacturer shall not be held liable for any damage caused by improper use of the product.

Service

- The manufacturer recommends that all repairs and adjustments be carried out by the Factory Service Technician or the Manufacturer's Authorized Service Point. For safety reasons, repairs should be referred to professionals.
- Repairs carried out by unqualified persons may seriously endanger the appliance user.
- Pursuant to Commission Regulation (EU) 2019/2022, the minimum availability period for spare parts necessary to repair the appliance is 7 or 10 years depending on the type and purpose of the spare part.
- The list of spare parts and the ordering procedure are available on the websites of the manufacturer, importer or an authorized representative.
- The minimum warranty period for the appliance offered by the manufacturer, importer or authorized representative is given in the warranty card.
- The warranty shall be void if you make any independent adaptations or alterations, tamper with seals or other appliance safety devices or its parts or interfere with the appliance contrary to operating instructions.

In the event of appliance malfunction, request assistance or repair.

If your appliance needs repair, please contact the service centre. Please see warranty card for address and contact details of our service centre. Before contacting us, please have ready the appliance serial number, which can be found on the identification sticker. For your convenience, please write it down below:

HÄFELE

HÄFELE SE & CO KG
ADOLF-HÄFELE-STRASSE 1
D-72202 NAGOLD
www.hafele.com