Dear Customer,

This Quick Start Guide is enclosed with detailed dishwasher Operating Instructions. Before using the appliance carefully read the Operating Instructions, especially guidelines for safe use.

Before plugging your dishwasher into the mains power, remove the safety packaging. Do not start the dishwasher before it is properly set up.

1 Turn on the appliance

- Open the door, press the on/off button.

2 Dispense detergent

- Press the latch to open the detergent dispenser.
- Add detergent to the dispenser.

3 Check the special salt level

- Add special salt to the dispenser when the corresponding indicator on the control panel comes on.

4 Load the dishes

- Remove food leftovers from the dishes
- Place the dishes in the racks according to loading guidelines.
- It is recommended to load the lower rack first, then the upper rack.

5 Select the wash programme

- Open the door, press the on/off button.
- Select a programme and press the Start button. Close the door. Dishwasher will start.

6 Start your dishwasher

- Open the dishwasher door.
- The dishwasher will start a wash programme.

7 Turn off the appliance

- Turn off the appliance using the [on/off] button

8 Remove dishes from the appliance

- When the dishwasher is off, open the door and wait about 15 minutes before removing the dishes. This will also facilitate the drying process. Hot dishes are more susceptible to cracking.

9 Features and components

- Spray arms
- Cutlery basket
- Upper rack
- Inner tube
- Bottom rack
- Salt container
- Detergent dispenser
- Mugs and cups shelves
- Main filter
- Water supply hose connection
- Water drain hose
- Adjuster

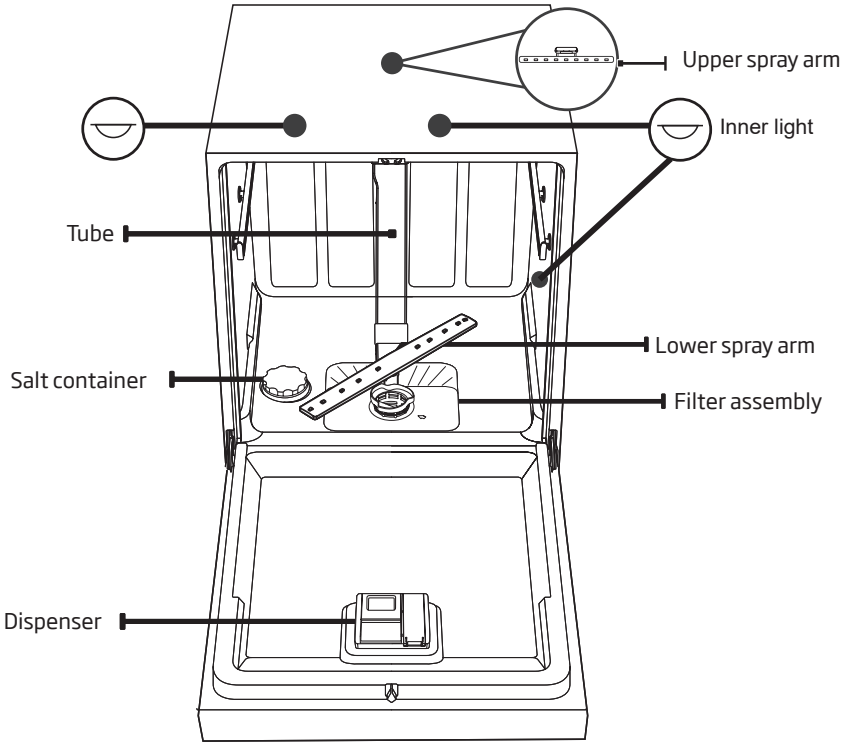

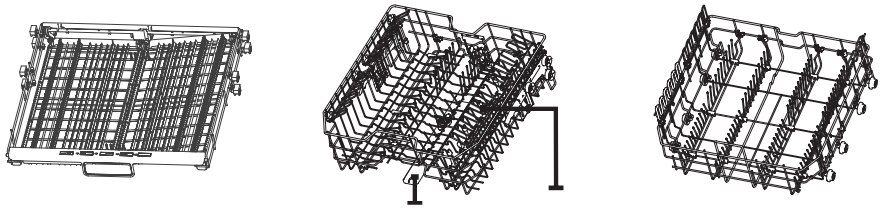

Upper rack

TABLE OF WASH PROGRAMMES: DIX57FcL6a

ITEM	Programme name	The default tempera-ture [°C]	Type of soil	Amount of detergent	Type of cycle						Duration [mini-mum]*	Power consumption [kWh]*	Water consumption [litres]*
1	Auto AUTO	55-65°	For lightly, normally to heavily soiled dishes, with or without dried food.	5g/19g (1 or 2 items)	Pre-wash 45°C	Wash 55-65°C	Rinse	Rinse	Rinse at 50-60°C	Dry	105-179	0,930-1,470	10,3-17,0
2	Hygiene+	72°	When you select the Hygiene programme, the water temperature will reach 72°C, which ensures that your dishes will be bacteria-free.	5g/19g (1 or 2 items)	Pre-wash 45°C	Wash 72°C	Rinse	Rinse 50°C	Rinse 60-65°C	Dry	165-175	1,650-1,720	16,0
3	Silent	50°	Less noise and normal energy consumption. Recommended for washing in the evening and at night.	5g/19g (1 or 2 items)	Wash 50°C	Rinse	Rinse 60-65°C	Dry			230-240	0,950-1,025	9,5
4	**ECO ECO	45°	This is the standard programme, it is suitable for normally soiled table-ware and it is the most efficient programme in terms of energy and water consumption.	24g (1 or 2 items)	Wash 45°C	Rinse	Rinse 43°C	Dry			280	0,559	9,0
5	Programme Complete 90' 90'	55°	For normally soiled loads that need a quick wash.	5g/19g (1 or 2 items)	Wash 55°C	Rinse	Rinse 55-60°C	Dry			90-100	0,810-0,865	9,0
6	Programme Complete 58' 58'	50°	For washing normally soiled dishes requiring quick washing and drying.	20g (1 tablet)	Wash 50°C	Rinse	Rinse 55°C	Dry			58-70	0,740-0,795	11,5
7	Programme Quick 35'	45°	This programme provides the shortest wash time for lightly soiled table-ware, which does not require drying.	15g (1 tablet)	Wash 45°C	Rinse	Rinse 50°C				45-50	0,650-0,710	9,0
8	Soak	--	For rinsing dishes that you plan to wash later that day.	--	Pre-wash						15	0,020	3,5
9	Auto-clean	70°	This programme is used to effectively clean the dishwasher interior without any load of dishes.	20g (1 tablet)	Wash 70°C	Rinse	Rinse 65-72°C	Dry			130-140	1,245-1,320	12,0

** Standard programme This is a reference program for research institutes. Tests according to PN-EN 60436.
This programme is suitable for washing normally soiled tableware. This is the most effective pro-gramme taking into account the total energy and water consumption for this kind of tableware.

* Programme duration, energy and water consumption value given in the table have been determined under laboratory conditions.
Actual values can vary.